CSN-A1K Micro panel printer
User Manual

Protocol: Lin Xiaopeng 2017.04.06

Audit : Hu Riyu 2017.04.08

Standardize：Liu Zhonghua 2017.04.09

Authorize: Wang Huanyong 2017.04.11

Company: Xiamen Cashino Technology Co., Ltd.
Tel: 0592-5517253 Fax: 0592-5231815
Address: 4/F,No.318,Tongji South Road, Jimei District,Xiamen,China.361021

The manual is subject to change without further notice. Please contact Xiamen Cashino Technology Co., Ltd. directly for the latest version.

revision record

Item	Date	Description	Edited page	Desing	Review
1	20170406	The first draft		Lin Xiaopeng	Hu Riyu
2	20180409	Printer parameters	6.7.8	Zhu Chunyan	Hu Riyu
3	20180523	Modify installation port size	6	Zhu Chunyan	Hu Riyu

www.cashinotech.com

Content

1. Product overview....6
2. Features....6
3. Dimension....6
4. Specifications....7
5. Pin definition description....8
6. Basic usage....9
6.1 Self-test page printing....9
6.2 LED indicator....9
6.3 Paper roll installation....10
7. Command Introduction....10
7.1 Command List....10
7.2 Commands details....13
①Printing and paper feed commands....13
Printing and paper feed....13
Enter....13
Print and paper feed dots....13
Print and paper feed n line....14
②Printing set commands....14
Set print position....14
Character right space setting....14
Set line space as n dots....15
Set horizontal and vertical movement units....15
Set line space to default....16
Set character print font....16
Set character printing method....16
Set character size....17
Set、remove white printing....18
Set、remove underline....19
Set、remove bold print....19
Set、remove overlapping....20
Set、cancel characters upside down....20
Set、remove 90°revolving printing....20
Allow、orbid key switch....21
Set the left margin....21
Set relative printing position....22
Set printing alignment....22
Select、cancel user customized characters....23
Define user customized characters....23
Cancel user customized characters....25
Set / remove quadruple angle of Chinese print....26

Set the Angle of Chinese character word space....26
Set up the Chinese characters to print mode combination....27
Set Chinese mode.... 27
Exit Chinese character mode....28
Set and cancel under line of Chinese character mode....28
Set and cancel under line of Chinese character mode....28
Selecting international character set....29
Select character code....29
③Graphic printing command.... 31
Fill Graphics vertical module data....31
Print Graphics horizontal module data.... 33
Define downloaded bitmap....34
Print downloaded bitmap.... 35
Define NV bitmap.... 36
Print NV bitmap.... 39
Print bitmap.... 40
Print MSB bitmap.... 40
④Tab Commands.... 42
Horizontal tab....42
Horizontal tab position setting....42
⑤bar code command.... 43
bar code readable character(HRI) print position setting....43
bar code readable character(HRI)font type selection.... 43
bar code height setting....44
bar code width setting.... 44
bar code printing....45
⑥ Printing QR code....50
Mode type of QR code.... 50
Setting error correction level of QR code....50
Store QR code data to data buffer.... 51
Printing QR code....51
Setting QR code graph information....52
⑦Status querying Commands....55
Transmission status.... 55
Transit theprinter status to host.... 56
Transit printer ID....57
Select peripherals.... 58
Real-time transmission status....59
Real-time pulse....63
⑧Commands in page print mode.... 63
Forms feed.... 63
Data print in page print mode....64
Page print mode select.... 64
Line print mode select.... 65

Character development angle select in page print mode..... 65
Page print mode print area setting.....66
Vertical absolute position setting in page print mode..... 67
Vertical relative position setting in page print mode.....68
⑨Other commands.....68
Printer reset.....68
Print self-test page.....69

1. Product overview

Name Micro panel printer
Model: CSN-A1K
Mounting port size: 73.1 (wide) *73.55 (high) mm
Embedding depth: 34.65mm
Application: medical printing equipment, measuring equipment,
Safety equipment, on-board printing equipment,
ID automation equipment, catering and retail,
EFTs POS machines, tax control printers, gas stations

2. Features

Smart appearance
Button control panel can be selected
Easy paper loading
Low noise thermal printing
Different interfaces optional
Easily embedded in various instruments and meters
Supports ESC/POS printing command

3. Dimension

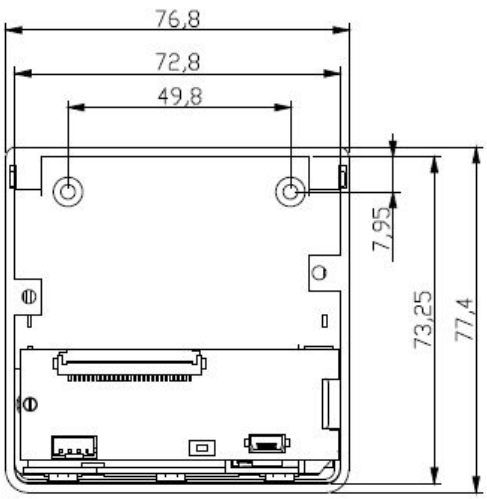

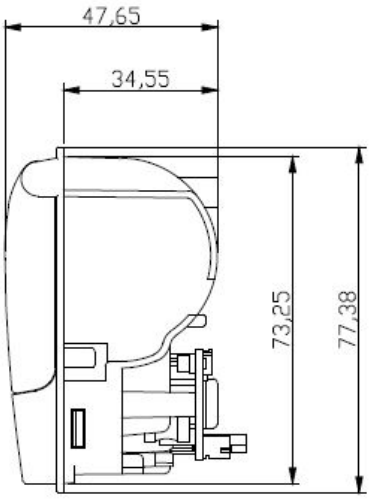

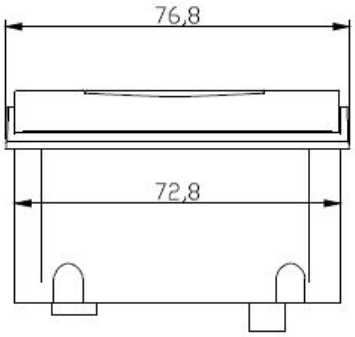

建议面板开口尺寸：73±0.1X73.45±0.1

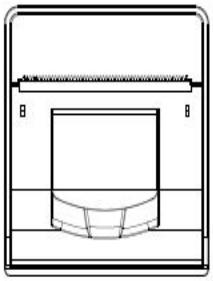

Suggested installation port size : 73±0.1X73.45±0.1MM

4. Specifications

Printing	Printing Method	Thermal line printing
	Printing speed	Max 90mm/s

	Resolution	203dpi(8 dots/mm)	
	Printing Width	48mm	
	Feeding accuracy	0.0625mm	
character	Character set	ASCII,GBK，BIG5 etc.	
	Font	ANK ： (9*17,12*24) Traditional Chesese：（24*24）	
Paper roll specifications	Paper type	Thermal paper	
	Paper width	57.5±0.5mm	
	Paper roll diameter	Max40mm	
	Paper thickness	60-85μm	
Heating head temperature detection		Via thermistor	
Paper end detection		Photoelectric detection	
Baud rate		9600bps-115200bps	
Interface		Serial（RS232,TTL）/USB	
Printer head reliability		100Km，or 1 million pulsed	
Power supply		DC5-9V，≥2A	DC12V，≥2A
Physical Properties	Dimension(WXLXH)	76.8*77.4*47.7mm	
	Embedded port size	73.1*73.55mm	
	color	black/beige/white	
	Embedding depth	34.65mm	
Environment	Operating Temp	0°C~50°C	
	Operating Humidity	20% ~85% RH	
	Storage Temp	-20°C~60°C	
	Storage Humidity	5% ~90% RH	

5. Pin definition description

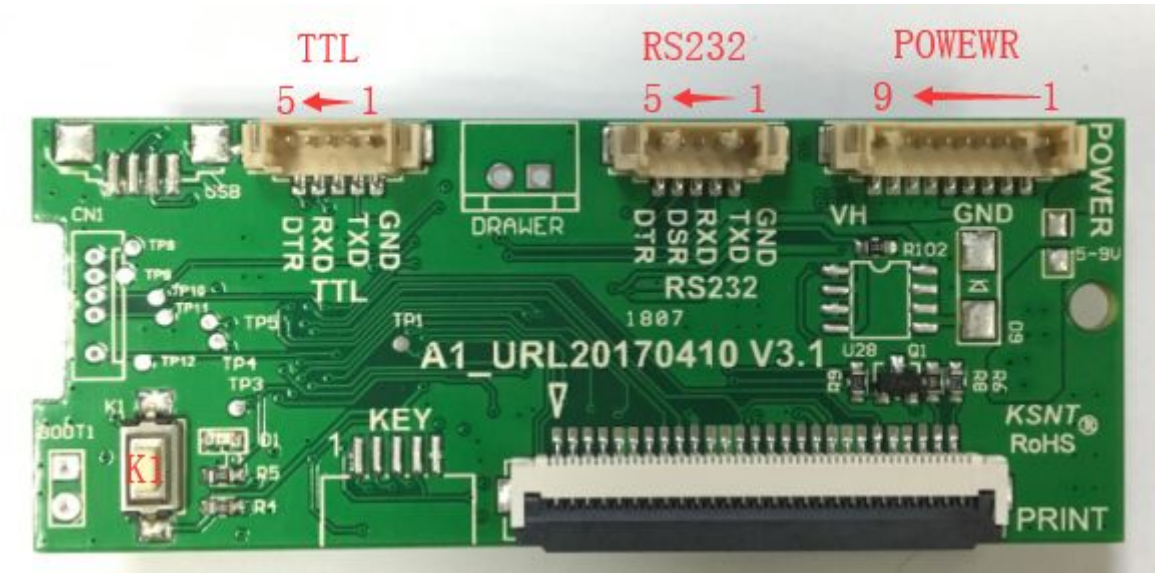

Power MH09/1.25mm

No.	Pin	Definition
1-5	GND	Ground
6-9	VH	Power

RS232 MH05/1.25mm

No.	Pin	Definition
1	GND	Ground
2	TXD	Data send
3	RXD	Data receive
4	DSR	Flow control
5	DTR	Flow control

TTL MH05/1.25mm

No.	Pin	Definition
1	GND	Ground
2	TXD	Data send
3	RXD	Data receive
4	DSR	Flow control
5	DTR	Flow control

6. Basic usage

6.1 Self-test page printing

Method 1: first, power off, then press and hold the feed button,and then power on the printer, There will come out the self-test page along with baud rate, language and other information on it.

Method 2: Press the K1 button on the control board to print a self - test page.

6.2 LED indicator

After power on, the red status indicator light on the control board will be on and off twice, with an interval of 1 second, indicating that the start is normal. Afterwards, the indicator

light is shown as below,
Flash 1: working normally
Flash 2: the mechanism is not connected or the temperature is too low
Flash 3: paper end
Flash 5: Mechanism is overheating

6.3 Paper roll installation

1. Open the printer upper cover;
2. Put the back of the roll up;
3. close the upper cover of the printer and leave the paper slightly exposed.

Note: before installing the paper roll, please tear the adhesive paper affixed on the paper roll clean, No foreign matter shall remain, to protect the printer head.

7. Command Introduction

7.1 Command List

ESC Command	
ESC !	Set character printing method
ESC - n	Set and delete underline
ESC E n	Set and delete bold printing
ESC G n	Set and delete overlapping printing
ESC { n	Set and delete inversion printing
ESC V n	Set and delete 90°rotate printing
ESC 1	Set line space n dots(same as ESC3)
ESC 2	Set default line space
ESC 3	Set line space n dots
ESC *	Bitmap vertical modulus data fillings
ESC d	Print and paper feed n lines
ESC % n	Choose and delete customized characters
ESC &	Define customized characters
ESC ? n	Delete customized character
ESC R n	International character sets
ESC t n	Select the character code page
ESC D	Set horizontal tabulation position
ESC J	Print and paper feed n dots
ESC p	Produce cashdrawer pulse
ESC c 5 n	Allow or prohibit to switch printer by button
ESC C	Undefined
ESC T n	Set printing direction in page print mode

ESC u	Peripheral device status transmission
ESC v	Printer status transmission
ESC i	Full cuts
ESC @	Printer reset
ESC =	Select peripherals device
ESC a	Setting position alignment mode
ESC $ nL nH	Set absolute print position
ESC \ nL nH	Set relative print position
ESC W	Page print mode print area setting
ESC L	Page print mode select
ESC S	Line print mode select
ESC FF	Data print in page print mode
ESC SP n	Character right space setting
ESC Z	QR code print
ESC M n	Set character print font
ESC m	Partly cuts
ESC q	Undefined
ESC Q	Undefined

GS Command	
GS ! n	Set character size
GS *	Define download bitmap
GS / m	Print download bitmap
GS :	Start or end macro definition
GS ^ r t m	Run macros
GS V m	Choose cut mode and cut
GS P x y	Set horizontal and vertical movement units
GS I n	Printer ID transmission
GS B n	Set and delete white printing
GS b	Undefined
GS H	Set 1-D barcode readable character(HRI) print position
GS f n	Set HRI character
GS h	Set 1-D barcoe hight
GS w	Set 1-D barcode width
GS k	1-D barcode
GS L nL nH	Set left margin amount
GS a n	Allow or prohibit to upload the status automatically
GS r n	Transmission status
GS v	Transfer printer status to host
GS v 0	Bitmap horizontal modulus data print
GS (	2-D barcode print
GS $nL nH	Vertical absolute position setting in page print mode

GS \ nL nH	Vertical relative position setting in page print mode

FS Command	
FS ! n	Kanji printing mode stored setting
FS &	Set Chinese character mode
FS .	Delete Chinese character mode
FS q	Define NV bitmap
FS p n m	Print NV bitmap
FS W n	Kanji quadruple size printing specification/ cancellation
FS – n	Set and delete kanji character underline
FS S n1 n2	Kanji character space Setting
FS 2	Undefined
FS A	Undefined

US Command	
US Q	Print double QR CODE
US A	Set paper type

DLE Command	
DLE EOT n	Real-time transmission status
DLE ENQ n	Real-time request
DLE DC4 fn m t	Real- time pulse

DC2 command	
DC2 T	Printing self-test page
DC2 *	Print bitmap
DC2 V	Print MSB bitmap
DC2 v	Print LSB bitmap

LF	Line feed
CR	Enter
FF	Forms feed
HT	Horizontal tab
SO	Paper feed to initial position at the next label

7.2 Commands details

①Printing and paper feed commands

Printing and paper feed

Name	print and paper feed
Code	ASCII ： LF DEC ： 10 HEX ： 0A
Function	Print the buffer contest,and set the paper feed as per line space,then adjust print position to initial position at the next line.
Range	None
Default	None
Notes	None
Example	None

Enter

Name	Enter
Code	ASCII ： CR DEC ： 13 HEX ： 0D
Function	Adjust print position to initial position of the same line.
Range	None
Default	None
Notes	After executing, R command, the new printing data will cover old data in the printing buffer.
Example	None

Print and paper feed dots

Name	Print and paper feed n dots
Code	ASCII ： ESC J n DEC ： 27 74 n HEX ： 1B 4A n
Function	Print the buffer content and paper feed
Range	0 ≤ n ≤ 255
Default	None
Notes	Paper feed n dots when printing buffer is empty.

	After executing this command,printing position is moved to initial
Example	1b 40 30 31 32 1b 4a 10

Print and paper feed n line

Name	Print and paper feed n lines
Code	ASCII ： ESC d n DEC ： 27 100 n HEX ： 1B 64 n
Function	Print the contents in printing buffer and paper feed n lines.
Range	0 ≤ n ≤ 255
Default	None
Notes	Print this command set as initial position of the same line
Example	1b 40 30 31 32 1b 64 01

②Printing set commands

Set print position

Name	Set print position
Code	ASCII ： ESC $ nL nH DEC ： 27 36 nL nH HEX ： 1B 24 nL nH
Function	Set left side blank area as（nL + nH × 256）dots
Range	0 ≤ nL ≤ 255 0 ≤ nH ≤ 255
Default	None
Notes	Set left side blank area as [(nL+nH*256)]*0.125mm] This command is only effective with the initial position of the line. This command is unavailable if it sets beyond the printing area.
Example	None

Character right space setting

Name	Character right space setting
Code	ASCII ： ESC SP n DEC ： 27 32 n HEX ： 1B 20 n
Function	Character right space setting as (n*0.125mm)
Range	0 ≤ n ≤ 255
Default	n = 0
Notes	When characters double width,Character right space is twice of normal.When characters amplified,Character right space is n

	times of normal. This command doesn't affect the setting of Chinese characters. This command sets the standard values independently in each mode.
Example	None

Set line space as n dots

Name	Set line space as n dots
Code	ASCII ： ESC 3 n DEC ： 27 51 n HEX ： 1B 33 n
Function	Set line space as n dots
Range	0 ≤ n ≤ 255
Default	n = 33
Notes	Line space as below: If the line space setted is less than the highest character in that line,then this line space is equal to the height of the highest character. If ESC2,ESC@,reset the printer, the printer blackout,and the line space turns to default.
Example	1b 40 1b 33 30 30 31 32 0d 0a 30 31 32 0d 0a 1b 32 30 31 32 0d 0a 30 31 32 0d 0a

Set horizontal and vertical movement units

Name	Set horizontal and vertical movement units
Code	ASCII ： GS P x y DEC ： 29 80 x y HEX ： 1D 50 x y
Function	Horizontal movement unit =25.4/x mm(1/x inch） Vertica movement unit =l25.4/y mm(1/y inch） When set X=0,Y=0, X and Y will display default value.
Range	0 ≤ x ≤ 255,0 ≤ y ≤ 255
Default	x=180,y=360

Notes	None
Example	None

Set line space to default

Name	Set line space to default
Code	ASCII ： ESC 2 DEC ： 27 50 HEX ： 1B 32
Function	Set line space to default 30 dots
Range	None
Default	None
Notes	Line space in details pls check ESC 3 command. If the line space setted is less than the height character in the line,the line space of this line is equal to the height of the highest character It can use ESC 3 to define line space.
Example	None

Set character print font

Name	set character print font
Code	ASCII ： ESC M n DEC ： 27 77 n HEX ： 1B 4D n
Function	set character print font parameter n bit definition as below n = 0，font 12*24 n = 1，font 9*17
Range	None
Default	n = 0
Notes	The command is effective with character. The command is disabled when ESC@, printer reset or blackout.
Example	1B 40 1B 4D 00 30 31 32 0D 0A 1B 40 1B 4D 01 30 31 32 0D 0A

Set character printing method

Name	Set character printing method
Code	ASCII ： ESC ! n DEC ： 27 33 n HEX ： 1B 21 n
Function	Set character printing methods (font,highlight,inversion,bold,double hight,double width and underline),parameter n bit definition as below: **Bit Function** **Value**

		0	1
	0 Font	Normal	Small character
	1 Undefined		
	2 Undefined		
	3 Bold	Cancel	Setting
	4 Double hight	Cancel	Setting
	5 Double width	Cancel	Setting
	6 Undefined		
	7 Underline	Cancel	Setting

Range	None
Default	n = 0
Notes	The command is effective with Chinese and foreign languages. The command is disabled when ESC@, printer reset or power off
Example	1B 40 1B 21 01 30 31 32 0D 0A 1B 40 1B 21 02 30 31 32 0D 0A 1B 40 1B 21 04 30 31 32 0D 0A 1B 40 1B 21 08 30 31 32 0D 0A 1B 40 1B 21 10 30 31 32 0D 0A 1B 40 1B 21 20 30 31 32 0D 0A 1B 40 1B 21 40 30 31 32 0D 0A 1B 40 1B 21 80 30 31 32 0D 0A

Set character size

Name	Set character size
Code	ASCII ： GS ! n DEC ： 29 33 n HEX ： 1d 21 n
Function	Set character size as 1-8 times width,1-8 times height. Definition is as below: Use 0-3 set character height 4 - 7 bits set character width show as below:

Chart 1
Character width setting

HEX	DEC	width
00	0	1(Normal)
10	16	2(double width)
20	32	3
30	48	4
40	64	5
50	80	6
60	96	7
70	112	8

Chart 2
Character height setting

HEX	DEC	height
00	0	1(Normal)
01	1	2(double height)
02	2	3
03	3	4
04	4	5
05	5	6
06	6	7
07	7	8

Range	None
Default	n = 0
Notes	This command is effective with Chinese and other foreign languages, except for HRI character. The command setting is disable when ESC@, printer reset or power off.
Example	1b 40 1d 21 11 30 31 32 0d 0a 30 31 32 0d 0a

Set、remove white printing

Name	Set、 remove white printing
Code	ASCII ： GS B n DEC ： 29 66 n HEX ： 1d 42 n
Function	Set and remove white printing When the LSB of n is 0,white printing mode is off. When the LSB of n is 1,white printing mode is on.
Range	None
Default	n = 0
Notes	It is only effective for LSB of n. This command is all effective with built-in characters and user-defined characters. It is effective with blank,which is setted by ESC CP,when white printing mode is on. This command is not effective with bitmap, user-defined bitmap, barcode, HRI character and vaulting space of HT,ESC $. This command is not effective with line space. The white printing mode is prior to underline mode. When it is white printing mode, even underline mode is open, which can also be forbidden.(But it not be canceled).

	This command is disabled when ESC@, printer reset or power off.
Example	1b 40 1d 42 01 30 31 32 0d 0a 30 31 32 0d 0a

Set、remove underline

Name	Set、 remove underline
Code	ASCII ： ESC - n DEC ： 27 45 n HEX ： 1B 2D n
Function	Set / remove underline mode,based on the value of n as follow: <table><tr><th>n</th><th>Functions</th></tr><tr><td>0, 48</td><td>Remove underline mode</td></tr><tr><td>1, 49</td><td>Set underline mode(1 dot coarse)</td></tr><tr><td>2, 50</td><td>Set underline mode(2 dot coarse)</td></tr></table>
Range	0 ≤ n ≤ 2, 48 ≤ n ≤ 50
Default	n = 0
Notes	Printer can print underline for all characters(including the space to the right of the character), except for the space set by HT. Printer can not print underline for clockwise rotated 90 ° characters and white printing characters. When n is setted as 0 or 48,remove underline mode.Other data is not printed as underline,and the setted underline coarseness does not change before removing underline mode.The default underline coarseness is 1 dot. It is not effective with underline coarseness to change character size. Using ESC! can also set and remove underline mode.However be aware that the last received command must be effective.
Example	1b 40 1b 2d 01 30 31 32 0d 0a 1b 40 1b 2d 02 30 31 32 0d 0a 1b 40 1b 2d 00 30 31 32 0d 0a

Set、remove bold print

Name	Set 、 remove bold print
Code	ASCII ： ESC E n DEC ： 27 69 n HEX ： 1B 45 n
Function	Set and remove bold print

	set and remove bold print When LSB of n is 0, remove bold print mode When MSB of n is 1, set bold print mode
Range	0 ≤ n ≤ 255
Default	n = 0
Notes	Only allow to use when LSB of n
Example	None

Set、remove overlapping

Name	Set 、 remove overlapping
Code	ASCII ： ESC G n DEC ： 27 71n HEX ： 1B 47 n
Function	Set and remove overlapping print mode When LSB of n is 0,remove overlapping print mode When MSB of n is 1,set overlapping print mode
Range	0 ≤ n ≤ 255
Default	n = 0
Notes	Only allow to use when LSB of n The printer output is the same in overlapping mode and bold mode
Example	None

Set、cancel characters upside down

Name	Set、cancel characters upside down
Code	ASCII ： ESC { n DEC ： 27 123 n HEX ： 1B 7B n
Function	n=1：set character upside down n=0：cancel character upside down
Default	n=0
Notes	None
Example	None

Set、remove 90°revolving printing

Name	Set 、 remove 90°revolving printing
Code	ASCII ： ESC V n DEC ： 27 86 n HEX ： 1B 56 n
Function	Set or remove 90° revolving printing When n is equal to 0 or 48,remove 90°revolving printing.

	When n is equal to 1 or 49,set 90°revolving printing.
Range	0 ≤ n ≤ 1， 48 ≤ n ≤ 49
Default	n = 0
Support Model	All
Notes	When it is setted to underline mode, the printer is not underlined for characters rotated 90°. In the 90° rotation mode, the multiplier and double width commands magnify the character in the opposite direction to the multiplier command in the normal mode. When ESC @, printer reset, power off, the setting of this instruction is invalid.
Example	1b 40 1b 56 01 30 31 32 0d 0a 30 31 32 0d 0a

Allow、orbid key switch

Name	Allow and forbid key switch
Code	ASCII ： ESC c 5 n DEC ： 27 99 53 n HEX ： 1B 63 35 n
Function	n=1, Forbid key switch n=0, Allow key switch
Default	n = 0
Notes	None
Example	None

Set the left margin

Name	Set the left margin
Code	ASCII ： GS L nL nH DEC ： 29 76 nL nH HEX ： 1D 4C nL nH
Function	Set the left margin as（nL + nH × 256）dots
Range	0 ≤ nL ≤ 255，0 ≤ nH ≤ 255
Default	None
Support Model	All
Notes	This command is only effective with the initial position of the line. The illustration is as follows:

	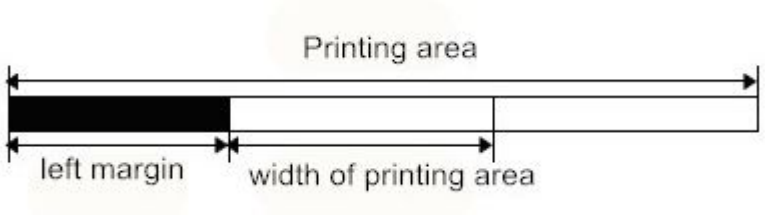 Use the maximum value of the printable unit,if the setting is beyond the printable area.
Example	1b 40 1d 4c 08 00 30 31 32 0d 0a 30 31 32 0d 0a

Set relative printing position

Name	Set relative printing position
Code	ASCII ： ESC \ nL nH DEC ： 27 92 nL nH HEX ： 1B 5c nL nH
Function	Based on the current position, using horizontal or vertical motion unit, set the printing start position This command sets the printing position from the current position to the distance of [(nL+nH*256)]*0.125 mm]
Range	0 ≤ nL ≤ 255 0≤ nH ≤ 255
Default	None
Notes	Any out of the printable area of the Settings are ignored When distance N point to right： nL+nH*256=N When distance N point to left：(reverse direction） nL+nH*256=65536-N In standard mode, use level of motor unit
Example	None

Set printing alignment

Name	Set print alignment（Left, middle, right）
Code	ASCII ： ESC a n DEC ： 27 97 n HEX ： 1B 61 n
Function	Align all data in one line,the meaning of n value as below: n mode 0, 48 left 1, 49 middle 2, 50 right

Range	0 ≤ n ≤ 2 or 48 ≤ n ≤ 50
Default	n = 0
Notes	This command setting is disabled when ESC@,printer resets or power off.
Example	1B 40 1B 61 02 30 31 32 0D 0A 1B 40 1B 61 01 30 31 32 0D 0A 1B 40 1B 61 00 30 31 32 0D 0A

Select、cancel user customized characters

Name	Select 、cancel user customized characters
Code	ASCII ： ESC % n DEC ： 27 37 n HEX ： 1B 25 n
Function	Select 、cancel user customized characters When n LSB is 0，delete customized characters When n LSB is 1，select customized characters
Range	0 ≤ n ≤ 255
Default	0
Notes	When cancel customized characters， automatically select the internal character set.
Example	None

Define user customized characters

Name	Define user customized characters
Code	ASCII ： ESC & y c1 c2 [x1 d1 ... d (yx1)] ... [xk d1 ... d(y x k)] DEC ： 27 38 y c1 c2 [x1 d1 ... d(yx1)] ...[xk d1 ... d(yxk)] HEX ： 1B 26 y c1 c2 [x1 d1...d(y x1)]...[xk d1...d(yxk)]
Function	Define user customized characters. y specifies vertical direction bytes. c1 specifies the starting character encoding,c2 specifies the ending character encoding xk specifies horizontal direction dots.
Range	The range of x 、y，are correspond with internal fonts. If choosing Font 6*12，y = 2， 0 ≤ x ≤ 6 If choosing Font 12*24，y= 3， 0 ≤ x ≤ 12 32 ≤ c1 ≤ c2 ≤ 126 0 ≤ d1 ... d(y*xk) ≤255
Default	None
Notes	Definable character code range:from<20>H to <7E>H ASCII code(95

characters)。

It can define continuous characters encoding for several characters.When it need one character only,make c1=c2.

d is character's dot data,dot mode starts from left side in the horizontal direction.It is blank for the rest dots in the right side.

Defined user defines characters data is (y*x) byte.

Set corresponding bit of printing dots as 1, or corresponding bit of no printing dots as 0.

This command defines different customized characters for each type of font. Set font with ESC !.

Customized characters and downlink bitmaps cannot be defined at the same time. When the command is executed, the downlink bitmap is cleared.

User Customized characters will be cleared in these situations:

Execute ESC @。

Execute GS *。

Execute ESC ?。

Printer reset or power off

Graphic:

When set font A(12 24).

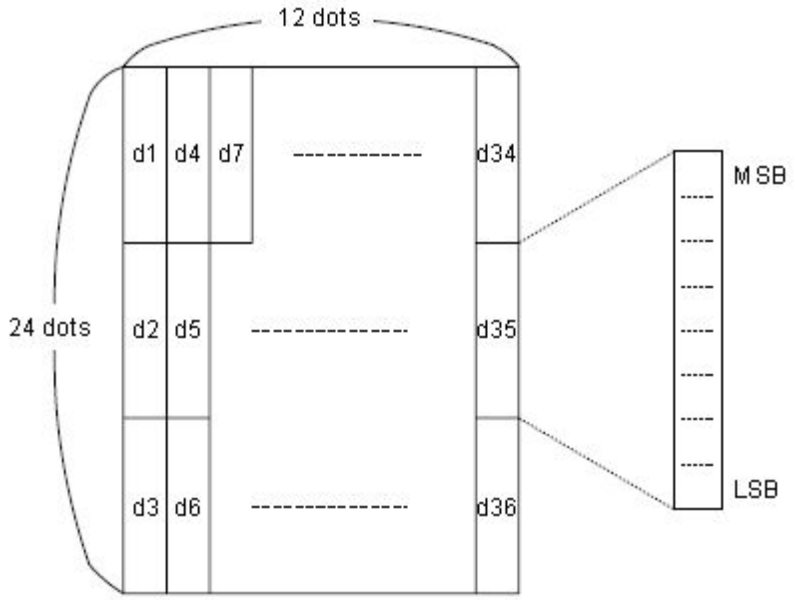

	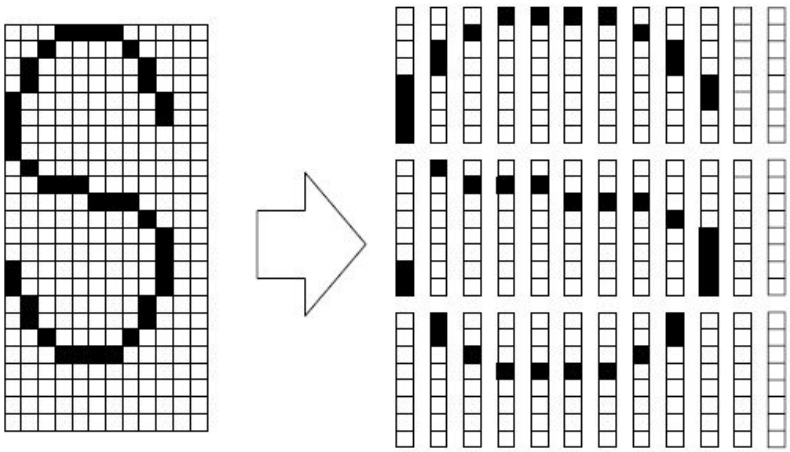 d1= <0F>H d4 = <30>H d7 = <40>H . . . . d2 = <03>H d5 = <80>H d8 = <40>H . . . . d3 = <00>H d6 =<00>H d9 = <20>H . . . .
Example	①y = 2 1B 40 1b 26 02 20 20 06 FF FF FF FF FF FF FF FF FF FF FF FF 1b 25 01 20 20 0D 0A 1b 3f 20 30 20 30 20 0d 0a ②y = 3 1B 40 1b 26 03 20 20 06 FF FF FF FF FF FF FF FF FF FF FF FF FF FF FF FF FF FF FF 1b 25 01 20 20 0D 0A 1b 3f 20 30 20 30 20 0d 0a

Cancel user customized characters

Name	Cancel user customized characters
Code	ASCII ： ESC ? n DEC ： 27 63 n HEX ： 1B 3F n
Function	Cancel user customized characters of specified code by n
Range	32 ≤ n ≤ 126
Default	None
Notes	This command terminates the use of styles defined for character encoding, which is specified by n. After the user customized character is canceled, it is printed in the corresponding mode of the internal character.

	In the font selected with ESC !, the command removes the style defined for the specified encoding. If a user customized character is not defined, the printer ignores the command.
Example	None

Set / remove quadruple angle of Chinese print

Name	Set / remove quadruple angle of Chinese print
Code	ASCII ： FS W n DEC ： 28 87 n HEX ： 1C 57 n
Function	Set or remove quadruple angle of Chinese print When LSB of n is 0,Remove quadruple angle of character mode When LSB of n is 1,Set quadruple angle of character mode
Range	0 ≤ n≤ 255
Default	n=0
Notes	Only the lowest bit of n is valid; In quadruple angle mode,printing character size is the same as set double width and double height mode to print character size at the same time When the quadruple angle mode is canceled with this command,the characters are printed according to the size of the pass-through character; When the height of some characters in a line is different, all the characters in the line are aligned on the basis of the baseline; When the character is enlarged in the horizontal direction, the character is enlarged to the right with the left side of the character as the reference.
Example	None

Set the Angle of Chinese character word space

Name	Set the Angle of Chinese character word space
Code	ASCII ： FS S n1 n2 DEC ： 28 83 n1 n2 HEX ： 1C 53 n1 n2
Function	Set the left and right Chinese character space to n1 and n2 respectively. The left character space is [n1*0.125 mm], and the right character space is [n2*0.125 mm]
Range	0 ≤ n1 ≤ 255 0 ≤ n2≤ 255
Default	n1=0,n2=0
Notes	This command sets the left and right character space of the variable size characters. When set to double width mode, the left and right character space is twice of the normal mode. You can set the space separately in standard mode.

	In standard mode, use horizontal motion units
Example	None

Set up the Chinese characters to print mode combination

Name	Set up the Chinese characters to print mode combination
Code	ASCII ： FS ! n DEC ： 28 33 n HEX ： 1C 21 n
Function	Set up Chinese characters print mode, the setting of n as follows：

Bit	OFF/ON	HEX	DEC	ASB status
0	--	--	--	None
1	--	--	--	None
2	OFF	00	0	Double-width mode is forbidden
	ON	04	4	Allow Double-height mode
3	OFF	00	0	Double-height mode is forbidden
	ON	08	8	Allow Double-height mode
4	--	--	--	None
5	--	--	--	None
6	--	--	--	None
7	OFF	00	0	Underline mode is forbidden
	ON	80	128	Allow the underline mode

Range	0 ≤ n ≤ 255
Default	n=0
Notes	Setting both double width mode and double height mode ,(including the right and left character space),it will print out character in four times of the size. The printer can underline all characters (including the right and left character space), but not the spaces set by the HT command, and clockwise 90°rotation characters underlined; When some characters in a line are double height or higher, all characters in the line will be aligned along the baseline; The width of the underline is specified by FS – regardless of the character size;
Example	None

Set Chinese mode

Name	Set Chinese mode
Code	ASCII ： FS & DEC ： 28 38 HEX ： 1C 26
Function	Set Chinese mode

Range	None
Default	None
Notes	When the Chinese character mode is selected, the printer processes all Chinese character codes(ASCII code) , two bytes at a time. The Chinese character code(ASCII code) is processed in the order of the first byte and the second byte.
Example	1b 40 1C 26 B0 AE C9 CF D7 D4 BC BA 0d 0a 1C 2E B0 AE C9 CF D7 D4 BC BA 0d 0a

Exit Chinese character mode

Name	Exit Chinese character mode
Code	ASCII ： FS . DEC ： 28 46 HEX ： 1C 2E
Function	Exit Chinese character mode，cancel Chinese character mode
Range	None
Default	None
Notes	None
Example	None

Set and cancel under line of Chinese character mode

Name	Set and cancel under line of Chinese character mode
Code	ASCII ： FS – n DEC ： 28 45 n HEX：1C 2D n
Function	Set/cancel under line mode,based on n value as below: n | Function 0,48 | Cancel underline mode 1,49 | Set underline mode(1 dot coarse) 2,50 | Set underline mode(2 dot coarse)
Range	0 ≤ n ≤2，48≤ n ≤ 50
Default	n=0
Notes	Printer can print underline for all characters(including characters space in left and right),but expect for setted blank by HT and Clockwise 90° rotation character underlined; Setting n to 0, after cancel under line of Chinese character, the underline printing will not be performed, but the previously specified underline width remains unchanged. The default underline width is 1 dot.t The specified slip line width remains the same even if the character size had changed

Example	None

Selecting international character set

Name	**Selecting international character set**
Code	ASCII ： ESC R n DEC ： 27 82 n HEX：1B 52 n
Function	Selecting international character set n from the following table: n Character 0 U.S.A 1 France 2 Germany 3 U.K 4 Denmark I 5 Sweden 6 Italy 7 Spain I 8 Japan 9 Norway 10 Denmark II 11 Spain II 12 Latin America 13 Korea 14 Slovenia 15 China
Range	0 ≤ n ≤ 15
Default	0
Notes	None
Example	1B 40 1B 52 00 20 21 22 23 24 25 26 27 28 29 2A 2B 2C 2D 2E 2F 30 31 32 33 34 35 36 37 38 39 3A 3B 3C 3D 3E 3F 40 41 42 43 44 45 46 47 48 49 4A 4B 4C 4D 4E 4F 50 51 52 53 54 55 56 57 58 59 60 6A 6B 6C 6D 6E 6F 70 71 72 73 74 75 76 78 79 7A 7B 7C 7D 7E 0D 0A

Select character code

Name	Select character code
Code	ASCII ： ESC t n DEC ： 27 116 n HEX ： 1B 74 n
Function	Selects n from character code N **Code Page**

	0	CP437 [U.S.A., Standard Europe]
	1	KataKana
	2	CP850 [Multilingual]
	3	CP860 [Portuguese]
	4	CP863 [Canadian-French]
	5	CP865 [Nordic]
	6	WCP1251 [Cyrillic]
	7	CP866 Cyrilliec #2
	8	MIK [Cyrillic /Bulgarian]
	9	CP755 [East Europe，Latvian 2]
	10	Iran
	11	Reserve
	12	Reserve
	13	Reserve
	14	Reserve
	15	CP862 [Hebrew]
	16	ＷCP1252 Latin I
	17	WCP1253 [Greek]
	18	CP852 [Latina 2]
	19	CP858 Multilingual Latin Ⅰ+Euro)
	20	Iran II
	21	Latvian
	22	CP864 [Arabic]
	23	ISO-8859-1 [West Europe]
	24	CP737 [Greek]
	25	WCP1257 [Baltic]
	26	Thai
	27	CP720[Arabic]
	28	CP855
	29	CP857[Turkish]
	30	WCP1250[Central Europe]
	31	CP775
	32	WCP1254[Turkish]
	33	WCP1255[Hebrew]
	34	WCP1256[Arabic]
	35	WCP1258[Vietnam]
	36	ISO-8859-2[Latin 2]
	37	ISO-8859-3[Latin 3]
	38	ISO-8859-4[Baltic]
	39	ISO-8859-5[Cyrillic]
	40	ISO-8859-6[Arabic]
	41	ISO-8859-7[Greek]
	42	ISO-8859-8[Hebrew]
	43	ISO-8859-9[Turkish]

	44 ISO-8859-15 [Latin 9] 45 Thai2 46 CP856 47 Cp874 252 CP932 SHIFT_JIS 253 UNICODE UCS-2 254 BIG5 255 GBK
Range	0 ≤ n ≤ 255
Default	0
Notes	None
Example	1B 40 1C 2E 1B 74 00 80 81 82 83 84 85 86 87 88 89 8A 8B 8C 8D 8E 8F 90 91 92 93 94 95 96 97 98 9A 9B 9C 9D 9E 9F A0 A1 A2 A3 A4 A5 A6 A7 A8 A9 AA AB AC AD AE AF B0 B1 B2 B3 B4 B5 B6 B7 B8 B9 BA BB BC BD BE BF C0 C1 C2 C3 C4 C5 C6 C7 C8 C9 CA CB CC CD CE CF D0 D1 D2 D3 D4 D5 D6 D7 D8 D9 DA DB DC DD DE DF E0 E1 E2 E3 E4 E5 E6 E7 E8 E9 EA EB EC ED EE EF F0 F1 F2 F3 F4 F5 F6 F7 F8 F9 FA FB FC FD FE FF 0D 0A

③Graphic printing command

Fill Graphics vertical module data

Name	Fill Graphics vertical module data
Code	ASCII ： ESC * m Hl Hh [d]k DEC ： 27 42 m Hl Hh [d]k HEX ： 1B 2A m Hl Hh [d]k
Function	Print vertical module graphic data,the parameters are as below: m is bit map format: m mode horizontal scale vertical scale 0 8dots single density ×2 ×3 1 8dots double density ×1 ×3 32 24dots single density ×2 ×1 33 24dots double density ×1 ×1 Hl、Hh is horizontal direction dots(Hl＋256×Hh） [d]k is bit map data K used for indicating bit map data bytes,not for transfer.
Parameter range	XX58： m = 0、1、32、33 1 ≤ Hl + Hh × 256 ≤ 384 0 ≤ d ≤ 255 k = Hl + Hh × 256（when m = 0、1） k = (Hl + Hh × 256) × 3（when m = 32、33）

	XX80： m = 0、1、32、33 1 ≤ Hl + Hh × 256 ≤ 576 0 ≤ d ≤ 255 k = Hl + Hh × 256（when m = 0、1） k = (Hl + Hh × 256) × 3（when m = 32、33）
Default	None
Notes	[d]k corresponding bit is 1,which means that this bit can print. While it is 0,it means that this bit can not print. The part of graphics horizontal direction which exceeds the printing area will be ignored. The relations between Bit map data and printing effects is as below: 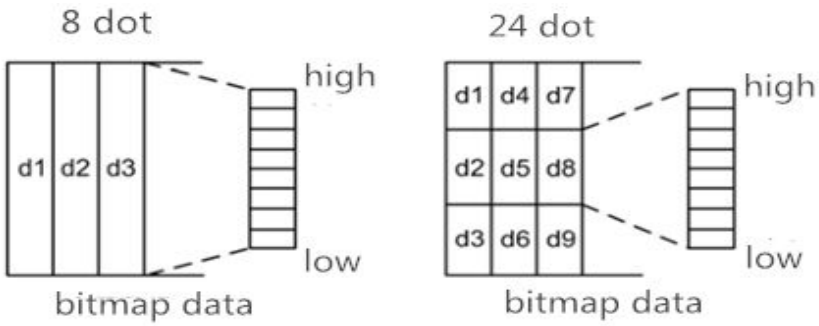 The command fills only the printing buffer, graphics printing can start only after receiving the printing commands.Printing buffer will be cleared after graphic printing. If you need to print higher graphics,you can divide it into several sections which has 8（m = 0、1）or 24（m = 32、33）dots graphics to print. After filling graphic data,you can continue to fill other information to make graphic and other information print simultaneously. After filling bitmap,you can use ESC J(n=24) command to print, and also can use LF command to print.But using LF command will cause paper feeding(feeding paper according to the line space),and make graphic continuous between different lines.And can set line space as 0 to avoid feeding too much.(Dot matrix printer may drift when it starts,pls send data continuously if occurs line broken.
Example	1B 40 1b 2a 00 0C 00 FF FF FF FF FF FF FF FF FF FF FF FF FF 1B 33 00 0A

Print Graphics horizontal module data

Name	Print Graphics horizontal module data
Code	ASCII ： GS v 0 DEC ： 29 118 48 m xL xH yL yH [d]k HEX ： 1D 76 30 m xL xH yL yH [d]k
Function	Print horizontal module graphic data,the parameters are as below: m as bitmap method： m Model Horizontal scale Vertacal scale 0,48 Normal × 1 × 1 1,49 Double-width × 2 × 1 2,50 Double-height × 1 × 2 3,51 Quadruple × 2 × 2 xL、xH were selected as the data bytes (xL+xH×256) in the horizontal direction for the bitmap. yL, yH were selected as the data bytes (yL+yH×256) in the vertical direction for the bitmap. [d]k for bitmap data k for bitmap data bytes，k used for indicating, not for transfer.
Parameter range	XX58： 0 ≤ m ≤ 3；48 ≤ m ≤ 51 1 ≤ xL + xH×256 ≤ 48 0 ≤ yL ≤255，0 ≤ yH ≤255 0 ≤ d ≤ 255 k = (Hl + Hh×256)×(yL + yH×256) XX80： 0 ≤ m ≤ 3；48 ≤ m ≤ 51 1≤ xL + xH×256 ≤ 72 0 ≤ yL ≤ 255，0 ≤ yH ≤ 255 0 ≤ d ≤ 255 k = (Hl + Hh×256)×(yL + yH×256)
Default	None
Notes	[d] k corresponding bit is 1,which means that this bit can print. While it is 0,it means that this bit can not print. If the horizontal bytes exceed printing area, then the exceeding part will be ignored. The paper feeds accordingly to the image size when this commanding is using, not influenced by the setting of ESC 2, ESC 3 line space. After this command, the printing coordinates will be reset to the left margin and the image content will be cleared. the relationship between bitmap data and the printing effect is as below:

<table>
<tr><td></td><td>
<table>
<tr><td>d1</td><td>d2</td><td>……</td><td>dx</td></tr>
<tr><td>d(x+1)</td><td>d(x+2)</td><td>……</td><td>d(x×2)</td></tr>
<tr><td>|</td><td>|</td><td>……</td><td>|</td></tr>
<tr><td>……</td><td>d(k-2)</td><td>d(k-1)</td><td>dk</td></tr>
</table>
MSB LSB MSB LSB MSB LSB MSB LSB
This command has the printing function, data will be transferred while printing, no need to use the printing command again</td></tr>
<tr><td>Example</td><td>1B 40
1d 76 30 00 03 00 09 00
FF FF FF FF FF FF FF FF FF FF FF FF FF FF FF FF FF FF FF FF FF FF FF FF FF FF FF</td></tr>
</table>

Define downloaded bitmap

Name	Define downloaded bitmap
Code	ASCII ： GS * x y d1...d(x×y×8) DEC ： 29 42 x y d1 ...d(x×y×8) HEX ： 1D 2A x y d1...d(x×y×8)
Function	using x and y to appoint dots to define the downloaded bitmap x appoints that the horizontal dots as 8*x. y appoints that the vertical dots as 8*y.
Parameter range	1 ≤ x ≤ 255 1 ≤ y ≤ 48 x*y ≤ 1536 0 ≤ d ≤ 255
Default	None
Notes	If x*y is out of the specified range, this command will be forbidden. The d indicates bitmap data. Data (d) specifies the printing bit as 1 and the not printing bit as 0. The downloaded bitmap definition will be cleared when: ESC @ is executed. ESC & is executed. Printer is reset or the power is turned off. The following figure shows the relationship between the downloaded bitmap and the printed data

<table>
<tr><td></td><td> 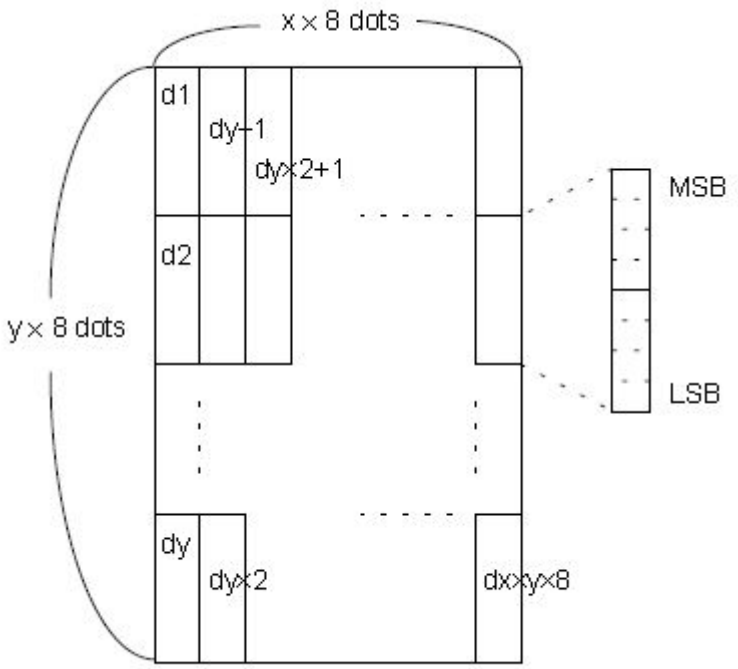
</td></tr>
<tr><td>Example</td><td>1B 40
1D 2A 03 03
FF FF FF FF FF FF FF FF FF FF FF FF FF FF FF FF FF FF FF FF FF FF FF FF FF
FF FF FF FF FF FF FF FF FF FF FF FF FF FF FF FF FF FF FF FF FF FF FF FF FF
FF FF FF FF FF FF FF FF FF FF FF FF FF FF FF FF FF FF FF FF FF FF FF FF FF
1D 2F 00</td></tr>
</table>

Print downloaded bitmap

<table>
<tr><td>Name</td><td>Print downloaded bitmap</td></tr>
<tr><td>Code</td><td>ASCII ： GS / m
DEC ： 29 47 m
HEX ： 1D 2F m</td></tr>
<tr><td>Function</td><td>Prints a downloaded bitmap using the mode specified by m.
Using the mode that m appointed to print downloaded bitmap
<table>
<tr><th>m</th><th>Model</th></tr>
<tr><td>0, 48</td><td>Normal</td></tr>
<tr><td>1, 49</td><td>Double-width</td></tr>
<tr><td>2, 50</td><td>Double-height</td></tr>
<tr><td>3, 51</td><td>Quadruple</td></tr>
</table></td></tr>
<tr><td>Parameter range</td><td>0 ≤ m ≤ 3
48 ≤ m ≤ 51</td></tr>
</table>

Default	None
Notes	this command will be ignored if the bitmap data has not been defined. In standard mode, this command is effective only when there is no data in the buffer area. This command has no effect in the print modes (emphasized, double-strike, downloadedline, character size, or white/black reverse printing), except for upsidedown printing mode. If the downloaded bitmap which will be printed exceeds the printing area, then the excess data will not be printed.
Example	No

Define NV bitmap

Name	Define NV bitmap
Code	ASCII ： FS q n [xL xH yL yH d1...dk]1...[xL xH yL yH d1...dk]n DEC ： 28 113 n [xL xH yL yH d1...dk]1...[xL xH yL yH d1...dk]n HEX ： 1C 71 n [xL xH yL yH d1...dk]1...[xL xH yL yH d1...dk]n
Function	Define the NV bitmap using the specified n. n specifies the number of the defined NV bitmap. xL, xH means that the defined NV bitmap specifies the horizontal dots as (xL+xH*256)*8 yL, yH means that the defined NV bitmap specifies the vertical dots as (yL + yHx256)*8
Parameter range	1 ≤ n ≤ 255 0 ≤ xL ≤ 255 0 ≤ xH ≤ 3 (1 ≤ (xL+xH*256) ≤ 1023) 0 ≤ yL ≤ 255） 0 ≤ yH ≤ 1 (1 ≤ (yL+yH*256) ≤ 288) 0 ≤ d ≤ 255） k = (xL+xH*256)*(yL+yH*256)*8 Totaled the defined data Area = 64 k bytes
Default	None
Support Model	All
Notes	Frequent writing command executions may damage the NV memory. Therefore, it is recommended to write the NV memory no more than 10 times per day. The printer performs a hardware reset operation after the procedure of placing the image into the NV memory. Therefore, user-defined characters, downloaded bitmaps should be defined only

	after completing this command. The printer clears the receiving and printing buffers and resets the printer to the mode that workable when power on. (hardware reset interface is not supported) This command cancels all NV bitmaps that have already been defined by this command. From the beginning of the processing of this command till the accomplishment of hardware reset, mechanical operations (including initializing the position of the print head when the cover is open, paper feeding using the FEED button, etc.) cannot be performed. During this command processing, the printer is busy and stops receiving data when writing data to the user's NV memory. Therefore, data transmission, including real-time commands, is prohibited during the execution of this command. NV bitmap is a bitmap defined in non-volatile memory, Define FS p printing with FS q. In standard mode, this command is valid only when processed at the beginning of the line. This command is valid when 7 bytes <FS yH> of the command are processed normally. When the data volume exceeds the left capacity of the range defined by xL, xH, yL, and yH, the printer will process the range defined by xL, xH, yL, and yH outside the defined range. In the first group of NV bitmaps, when any one of xL, xH, yL, yH is out of the definition range, this command is disabled. In groups of NV bitmaps other than the first group, when xL, xH, yL, yH out of the defined range, it stops processing this command and starts writing into the NV images. At this time, NV bitmaps that haven't been defined are disabled (undefined), but any NV bitmaps before that are enabled. The d indicates the definition data. In data (d) a 1 bit specifies a dot to be printed and a 0 bit specifies a dot not to be printed. This command defines n as the number of a NV bitmap. Numbers rise in order from NV bitmap 01H. Therefore, the first data group [xL xH yL yH d1...dk] is NV bitmap 01H, and the last data group [xL xH yL yH d1...dk] is NV bitmap n. The total agrees with the number of NV bitmaps specified by the command FS p. The definition data for an NV bitmap consists of [xL xH yL yH d1...dk]. Therefore, when only one NV bitmap is defined n=1, the printer processes a data group [xL xH yL yH d1...dk] once. The printer uses ([data: (xL xH× 256)×(yL yH× 256)×8] [header :4]) bytes of NV memory. The definition area in this printer is a maximum of 192K bytes. This command can define several NV bitmaps, but cannot define bitmap

	data whose total capacity [bitmap data header] exceeds 192K bytes. The printer does not transmit ASB status or perform status detection during processing of this command even when ASB is specified. Once an NV bitmap is defined, it is not erased by performing ESC @, reset, and power off. This command performs only definition of an NV bitmap and does not perform printing. Printing of the NV bitmap is performed by the FS pcommand. Diagram：when xL = 64, xH = 0, yL = 96, yH = 0 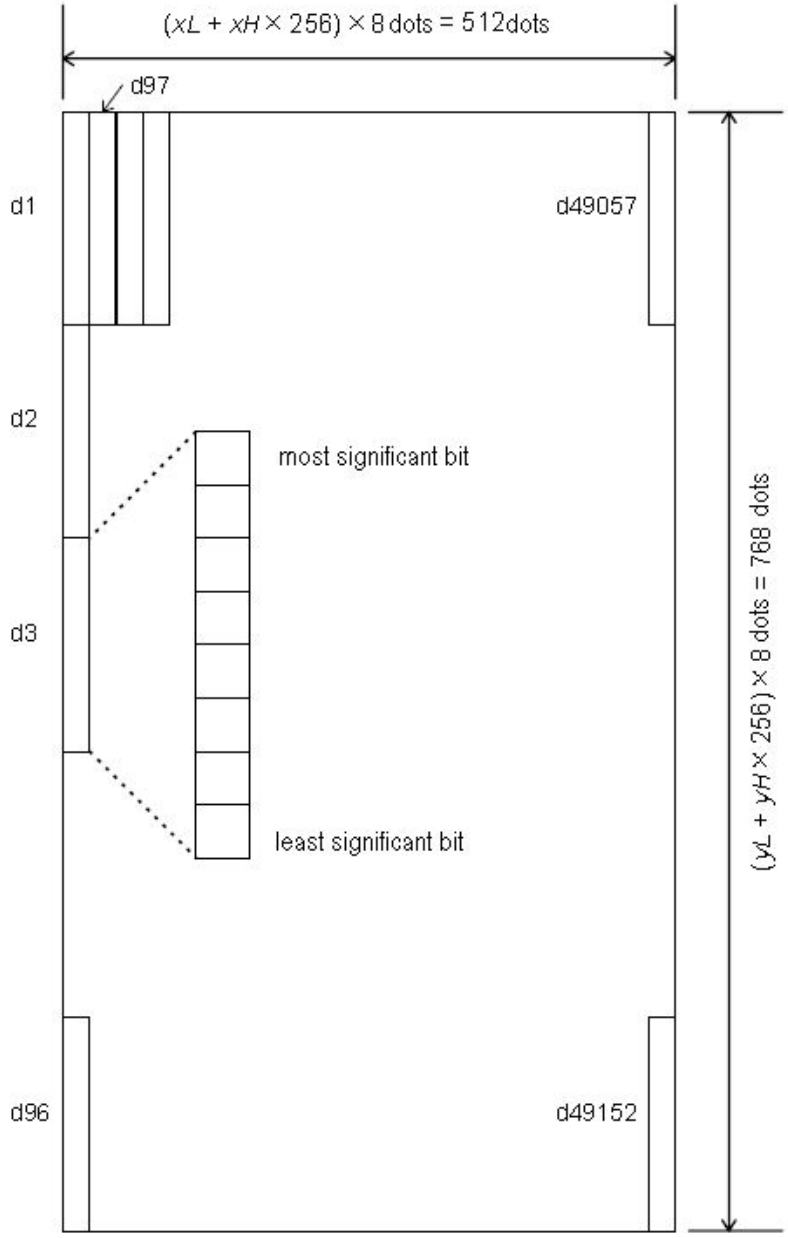
Example	1B 40

	1C 71 01 03 00 03 00 FF FF FF FF FF FF FF FF FF FF FF FF FF FF FF FF FF FF FF FF FF FF FF FF FF FF FF FF FF FF FF FF FF FF FF FF FF FF FF FF FF FF FF FF FF FF FF FF FF FF FF FF FF FF FF FF FF FF FF FF FF FF FF FF FF FF FF FF FF FF FF FF FF FF FF 1C 70 01 00

Print NV bitmap

Name	Print NV bitmap
Code	ASCII ： FS p n m DEC ： 28 112 n m HEX ： 1C 70 n m
Function	Print NV bitmap n using the mode specified by m. m — Mode 0, 48 — Normal 1, 49 — Double-width 2, 50 — Double-height 3, 51 — Quadruple
Parameter range	0 ≤ m ≤ 3 48 ≤ m ≤ 51 1 ≤ n ≤ 255
Default	None
Support	All
Notes	n is the number of the NV bitmap (defined using the FS q command). m specifies the bitmap mode. NV bitmap is a bitmap defined in non-volatile memory by FS q and printed by FS p. This command is not effective when the specified NV bitmap has not been defined. In standard mode, this command is effective only when there is no data in the print buffer. This command is not affected by print modes (Bold printing, overlapping,underline, character size, white/black reverse printing, or 90° rotated characters, etc.), except upside-down printing mode. If the downloaded bit-image to be printed exceeds one line, the excess data is not printed. This command feeds dots (for the height n of the NV bitmap) in normal and double-width modes, and (for the height n 2 of the NV

	bitmap) in double height and quadruple modes, regardless of the line space specified by ESC 2 or ESC 3. After printing the bitmap, this command sets the print position to the beginning of the line and processes the data that follows as normal data.
Example	None

Print bitmap

Name	Print bitmap
Code	ASCII : DC2 * r n [d1…dn] DEC : 18 41 r n [d1…dn] HEX : 12 2A r n [d1…dn]
Function	r:Stands for height of bitmap n:Stands for width of bitmap Bitmap format 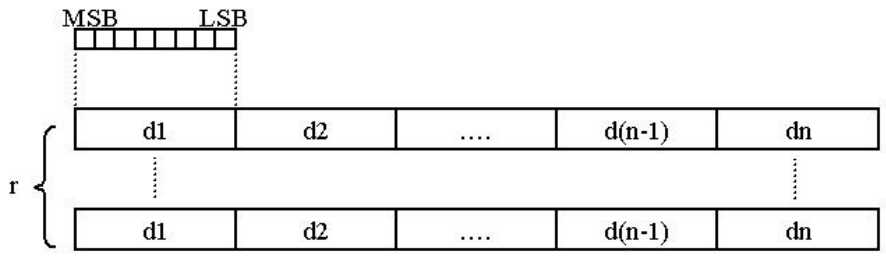 .
Parameter range	None
Default	None
Support	All
Notes	None
Example	None

Print MSB bitmap

Name	Print MSB bitmap
Code	ASCII : DC2 V nL nH [d1…dn] DEC : 18 86 nL nH [d1…dn] HEX : 12 56 nL nH [d1…dn]
Function	The width of the bitmap must be the same as that of the printer Bitmap Height: nL+nH*256 Bitmap format

	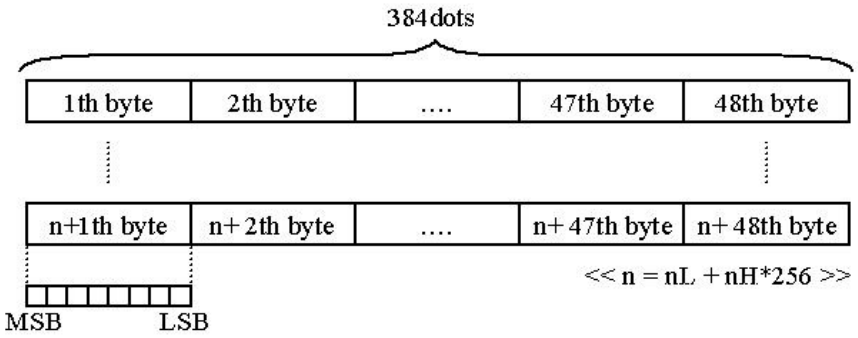
Parameter range	0 ≤ m ≤ 3 48 ≤ m ≤ 51 1 ≤ n ≤ 255
Default	None
Support	All
Notes	None
Example	None

Print LSB bitmap

Name	Print LSB bitmap
Code	ASCII ： DC2 v nL nH [d1…dn] DEC ： 18 118 nL nH [d1…dn] HEX ： 12 76 nL nH [d1…dn]
Function	The width of the bitmap must be the same as that of the printer Bitmap Height: nL+nH*256 Bitmap format 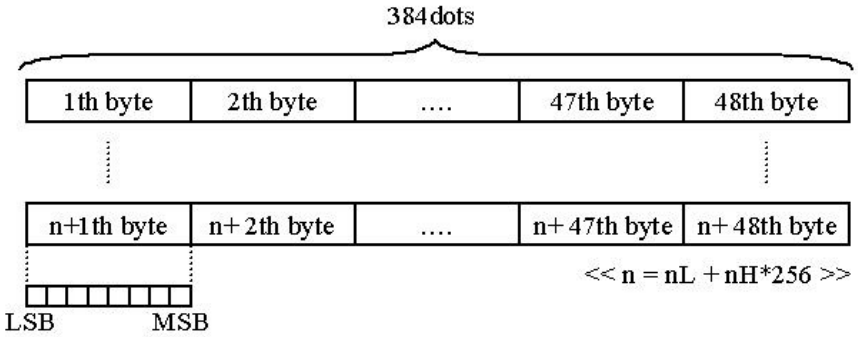
Parameter range	None
Default	None
Support	All
Notes	None
Example	None

④Tab Commands

Horizontal tab

Name	Horizontal tab
Code	ASCII ： HT DEC ： 9 HEX ： 09
FUNCTION	Move the print position to the next tab position
Parameter range	None
Defaults	None
Notes	Tab position set by ESC D If the tab position is not set(the default is no horizontal position),this command will be treated as an LF command If the tab position exceeds the print area,the coordinates will move to the star position of the next line(as the data is full,print and wrap)
Example	none

Horizontal tab position setting

Name	horizontal tab position setting
Code	ASCII ： ESC D [d]k NUL DEC ： 27 68 [d]k 0 HEX ： 1B 44 [d]k 00
Function	Set horizontal tab position, parameter meaning as below: d1 ... dk：horizontal position,in 8 as unit,null as the terminator
Parameter range	XX58：1 ≤ d ≤ 46（d1 <d2 < …… dk ， 1 ≤ k ≤ 16） XX80：1 ≤ d ≤ 70（d1 < d2 < …… dk ， 1 ≤ k ≤ 16）
Defaults	The default positioning position is the 8-character interval(Column 9 17 25...) of the font A(12-24)
Support model	All
Notes	Tab position as below： 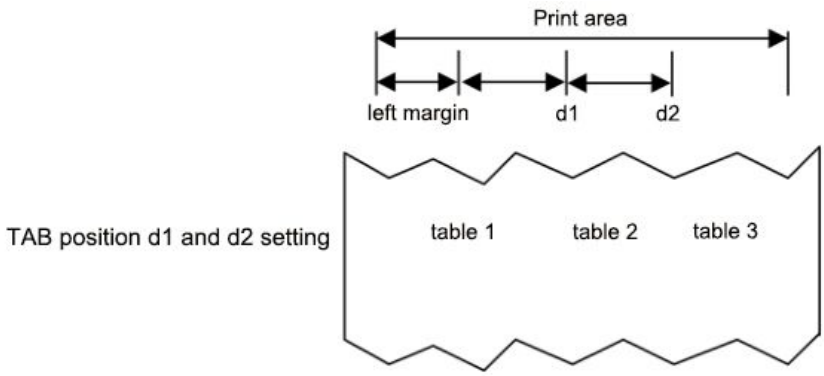

	Maximum support for the setting of 16 tab position Using this command,the setting of previous tab position will be canceled k is for indication purpose,no transmission When transport [d]k,and come across NULL,should be considered over If dk less than or equal to dk-1,should be considered over,and balance data is treated as normal data processing TAB position could be changed by HT command When the left margin changes, the TAB position changes simultaneously The command setting will be valid after ESC @、printer reset、power off
Example	1B 44 04 06 08 0A 00 09 30 09 31 09 32 09 33 0D 0A

⑤bar code command

bar code readable character(HRI) print position setting

Name	bar code readable character(HRI)print position setting
Code	ASCII ： GS H n DEC ： 29 72 n HEX ： 1D 48 n
Function	Set bar code readable character(HRI)print position,n parameter meaning as below： n print position 0，48 don't print 1，49 above the bar code 2，50 below the bar code 3，51 above and below the bar code
Parameter range	0 ≤ n ≤ 3 or 48 ≤ n ≤ 51
Defaults	n = 0
Notes	The command setting will be valid after ESC @、printer reset、power off
Example	None

bar code readable character(HRI)font type selection

Name	bar code readable character(HRI)font type selection
Code	ASCII ： GS f n DEC ： 29 102 n HEX ： 1D 66 n
Function	Select a font for the HRI character to be used when print the bar code The relationship between n and selection contents as below

n	Font
0,48	Font A（12*24）
1,49	Font B（9*17）

Parameter range	n =0,1,48,49
Defaults	n = 0
Notes	None
Example	None

bar code height setting

Name	bar code height setting
Code	ASCII ： GS h n DEC ： 29 104 n DEX ： 1D 68 n
Function	Parameter n specifies the height of a bar code in dots： Height 50 Height 100
Parameter range	1 ≤ n ≤ 255
Defaults	n = 64
Notes	The command setting will be valid after ESC @、printer reset、power off
Example	None

bar code width setting

Name	bar code width setting
Code	ASCII ： GS w n DEC ： 29 119 n HEX ： 1D 77 n
Function	Parameter n specifies the unit of a bar code in dots： Width 3 Width 4
Parameter range	1 ≤ n ≤ 6
Defaults	n = 2

Noted	The command setting will be valid after ESC @、printer reset、power off
Example	None

bar code printing

Name	bar code printing
Code	**(A)** ASCII ： GS k m [d]k NUL DEC ： 29 107 m [d]k NUL Hex ： 1D 6B m [d]k NUL **(B)** ASCII ： GS k m n [d]k DEC ： 29 107 m n [d]k Hex ： 1D 6B m n [d]k
Function	bar code printing,the parameters meaning as below： m is encoding n is code data length,only for (command B),the difference between (A) and (B)is that the data (A) end with NULL,but (B) indicates the data length [d]k is bar code data K is the length of the bar code data,for sign,no transmission Parameters relationship as below: **(Command A)**

m	Coding system	Bar code length（SP show space）			
		Data length	k	Character set	Data（d）
0	UPC-A	fixed	k = 11，12	0~9	48≤d≤57
1	UPC-E	fixed	6≤k≤8， k = 11，12	0~9	48≤d≤57 [when k = 7,8,11,12， d1 = 48]
2	JAN13 (EAN13)	fixed	k = 12，13	0~9	48≤d≤57
3	JAN8 (EAN8)	fixed	k = 7，8	0~9	48≤d≤57
4	CODE39	changeable	1≤k	0~9，A~Z SP，$，%，*， +，-，.，/	48≤d≤57， 65≤d≤90， d = 32，36，37， 42，43，45， 46，47
5	ITF (Interleaved 2 of 5)	changeable	2≤k≤255 （even numbers）	0~9	48≤d≤57
6	CODABAR	changeab	1≤k	0~9，A~D，a~d $，+，-，.，/，:	48≤d≤57， 65≤d≤68，

	(NW-7)	le			97≤d≤100， d = 36，43，45， 46，47，58 (65≤d1≤68， 65≤dk≤68， 97≤d1≤100， 97≤dk≤100)

(Command B)

m	Coding system	Bar code length（SP show space）			
		Data length	n	Character set	Data（d）
65	UPC-A	fixed	n = 11，12	0~9	48≤d≤57
66	UPC-E	fixed	6≤n≤8， n = 11，12	0~9	48≤d≤57 [when n = 7,8,11,12， d1 = 48]
67	JAN13 (EAN13)	fixed	n = 12，13	0~9	48≤d≤57
68	JAN8 (EAN8)	fixed	n = 7，8	0~9	48≤d≤57
69	CODE39	changeable	1≤n	0~9，A~Z SP，$，%，*， +，-，.，/	48≤d≤57， 65≤d≤90， d = 32，36，37， 42，43，45， 46，47
70	ITF (Interleaved 2 of 5)	changeable	2≤n≤255 （even numbers）	0~9	48≤d≤57
71	CODABAR (NW-7)	changeable	1≤n	0~9，A~D，a~d $，+，-，.，/，:	48≤d≤57， 65≤d≤68， 97≤d≤100， d = 36，43，45， 46，47，58 (65≤d1≤68， 65≤dk≤68， 97≤d1≤100， 97≤dk≤100)
72	CODE93	change	1≤n≤255	00H~7FH	0≤d≤127

		able			
73	CODE128	changeable	1≤n≤255	00H~7FH C1H~C4H(FNC)	0≤d≤127 d = 193，194,195,196
74	UCC/EAN128	changeable	1≤n≤255	00H~7FH C1H~C4H(FNC)	0≤d≤127 d = 193，194,195,196

Parameter range	(A) 0 ≤ m ≤ 6 (B) 65 ≤ m ≤ 74
Defaults	None
Notes	If the bar code width exceed the printable area,the printer does not perform barcode printing Paper feed as needed when the command is carried out,that not affected by ESC2,ESC3 line space settings,and do not influence line space settings The command is not affected by ESC ！character style setting The print position is resorted to the print start location after the command is executed m parameter 0 ~ 6(A) and 65 ~ 71(B) select the same coding system,the same printing effect m parameter is 0 ~ 6(A),barcode data end with NULL m parameter is 65 ~ 74(B),barcode data n stand for data length K is for sign,no transmission When print UPCA（m = 0 or 65）,Please pay attention for the following points: Whatever the input data length is 11 or 12,the check bit is automatically inserted or corrected Initial character,central split character,and terminator are inserted automatically When print UPCE（m = 1 or 66）,Please pay attention as following: The system character (NSC) 0 will be inserted automatically when data length is 6 The first system character (NSC) d1 must be 0 when the data length is 7,8,11 and 12. Whatever the data length is 6,7,8,11 and 12,the check bit inserted or corrected automatically Whatever the input data length is 6,7,8,11,and 12,the barcode readable character(HRI) just show 6 as data,but excluded system character (NSC) and check code; The transition relation between transmission and printing data as below:

Transmitted data										Printed data					
d2	d3	d4	d5	d6	d7	d8	d9	d10	d11	d1	d2	d3	d4	d5	d6
0~9	0~9	0	0	0	-	-	0~9	0~9	0~9	d2	d3	d9	d10	d11	0
0~9	0~9	1	0	0	-	-	0~9	0~9	0~9	d2	d3	d9	d10	d11	1
0~9	0~9	2	0	0	-	-	0~9	0~9	0~9	d2	d3	d9	d10	d11	2
0~9	0~9	3~9	0	0	-	-	-	0~9	0~9	d2	d3	d4	d10	d11	3
0~9	0~9	0~9	1~9	0	-	-	-	-	0~9	d2	d3	d4	d5	d11	4
0~9	0~9	0~9	0~9	1~9	-	-	-	-	5~9	d2	d3	d4	d5	d6	d11

When d6 is 1~9,be sure d7,d8,d9,d10 are 0,and d11 is 5~9

Initial character,terminator automatically inserted

When print EAN13(m = 2 or 67),Please pay attention as following:

Whatever the input data length is 12 or 13,check bit is automatically inserted or corrected

Initial character,central split character and terminator inserted automatically

When print EAN8(m = 3 or 68),please pay attention as following:

Whatever input data length is 7 or 8,the check bit is automatically inserted or corrected

Initial character,central split character and terminator inserted automatically

When print CODE39(m = 4 or 69),please pay attention as following:

When d1 or dn are not Initial character/terminator ”*”, encoder is automatically inserted ”*”

When middle of the data encounter ”*”, the encoder regard it as terminator, the other data as the normal data;

The check bit could not calculate and add automatically

When print ITF25(m = 5 or 70), please pay attention as following:

Initial character and terminator inserted automatically

The check bit could not calculate and add automatically

When print CODABAR (NW-7) (m = 6 or 71),please pay attention as following:

Initial character and terminator could not inserted automatically,but manual addition by user, that the range from “A”~”D” or “a”~”d”

Check bit could not calculate and add automatically

When print CODE93(m = 72),please pay attention as following:

Initial character and terminator inserted automatically

The two check code are automatically calculated and then inserted

When barcode readable character(HRI) is set to print, there is no HRI character which indicating start/end

When barcode readable character(HRI) is set to print,the control

character will be replaced with space

When print CODE128(m = 73),please pay attention as following:

The encoding system intelligently identifies data and implements minimum length encoding without the user set character (include starting character set) or switch character

Function character FNC1~FNC4 use C1H~C4H and input it

The check bit could calculate and add automatically

When barcode readable character(HRI) is set to print,the control character and FNC1~FNC4 will be replaced with space

When print EAN128(m = 74),please pay attention as following:

Basic construction as below:

Initial character set	FNC1	AI	Data part	Check bit A	Check bit B	Terminator
Inserted automatically		（d1...dk）			Inserted automatically	

Connection structure as below:

Initial character set	FNC1	AI	Data part	Check bit A	FNC1	AI	Data part	Check bit A	Check bit B	Terminator
Inserted automatically		（d1...dk）							Inserted automatically	

The encoding system intelligently identifies data and implements minimum length encoding without the user set character (include starting character set) or switch character

Function character FNC1~FNC4 use C1H~C4H and input it

User input data AI,which do not need “(“”)” for indication,encoding system inserted automatically,otherwise it will be wrong.For example,GS k 74 18 "019501234567890*", 01 is AI,the following will be wrong:GS k 74 18 "(01)9501234567890*"

When user use the connection structure,need to insert FNC1(C1H”Decimal=193”) in the middle.The input example as following:

GS k 74 18 "019501234567890*" 193 "029501234567890*"

When barcode readable character(HRI) is set to print,the control character will be replaced with space,then cancel FNC1~FNC4

Example

1b 40 1d 48 02
1d 6b 41 0c 31 32 33 34 35 36 37 38 39 30 31 32
1d 6b 42 0c 30 32 33 34 35 36 30 30 30 30 38 39
1d 6b 43 0c 30 32 33 34 35 36 30 30 30 30 38 39
1d 6b 44 08 30 32 33 34 35 36 30 30

	1d 6b 45 08 30 32 33 34 35 36 30 30 1d 6b 46 08 30 32 33 34 35 36 30 30 1d 6b 47 08 41 32 33 34 35 36 30 41 1d 6b 48 08 41 30 32 33 34 35 36 41 1d 6b 49 08 41 30 32 33 34 35 36 41

⑥ Printing QR code

Mode type of QR code

Name	Mode type of QR code
Code	ASCII ：GS (k pL pH cn fn n Decimal ：29 40 107 pL pH cn fn n Hexadecimal ：1D 28 6b pL pH cn fn n
Function	Setting mode type of QR code to [n dot × n dot].
Parameter range	pL=3, pH=0 cn=49 fn=67 0 ≤ n ≤ 16
Default	n=3
Notes	Setting mode type of QR code to [n dot × n dot].
Example	None
Name	Mode type of QR code

Setting error correction level of QR code

Name	Setting error correction level of QR code
Code	ASCII ：GS (k pL pH cn fn n DEC ：29 40 107 pL pH cn fn n HEX ：1D 28 6b pL pH cn fn n
Function	Setting error correction level of QR code
Parameter range	pL=3, pH=0 cn=49 fn=69 48 ≤ n ≤ 51
Default	n=48
Notes	Setting error correction level of QR code

n	Function	Approximate Amount of correction
4 8	Error correction level (L)	7%

	49	Error correction level (M)	15%
	50	Error correction level(Q)	25%
	51	Error correction level (H)	30%
Example	None		
Name	Setting error correction level of QR code		

Store QR code data to data buffer

Name	Store QR code data to data buffer
Code	ASCII ：GS (k pL pH cn fn m d1…dk DEC ：29 40 107 pL pH cn fn m d1…dk HEX ：1D 28 6b pL pH cn fn m d1…dk
Function	Store QR code data to data buffer
Parameter range	4 ≤ (pL + pH×256) ≤ 7092 (0 ≤ pL ≤ 255, 0 ≤ pH ≤ 28) cn=49 fn=80 m=48 0 ≤ d ≤ 255 k = (pL + pH×256) - 3
Default	No
Notes	Store QR code data (d1...dk) to data buffer. ((pL + pH×256) - 3) bytes is processed as a graphic data after the m (d1...dk).
Example	None
Name	Store QR code data to data buffer

Printing QR code

Name	Printing QR code
Code	ASCII ：GS (k pL pH cn fn m DEC ：29 40 107 pL pH cn fn m HEX ：1D 28 6b pL pH cn fn m
Function	Printing QR code
Parameter range	pL=3, pH=0 cn=49 fn=81 m=48
Default	None

Notes	Printing QR code. Users must consider QR code graph space. (The space of up and down, left and right of QR code graph is specified in the specification.)
Example	1b 40 1d 28 6b 03 00 31 43 03 1d 28 6b 03 00 31 45 30 1d 28 6b 06 00 31 50 30 41 42 43 1b 61 01 1d 28 6b 03 00 31 52 30 1d 28 6b 03 00 31 51 30
Name	Printing QR code

Setting QR code graph information

Name	Setting QR code graph information
Code	ASCII ：GS (k pL pH cn fn m DEC ：29 40 107 pL pH cn fn m HEX ：1D 28 6b pL pH cn fn m
Function	Setting QR code graph information The detailed graph information is as follows:

Transmit data	Hexadecimal	Decimal	Data type
Header	37H	55	1byte
Flag	36H	54	1byte
Width	30H-39H	48-57	1-5byte
Separator	1FH	31	1byte
Height	30H-39H	48-57	1-5byte
Separator	1FH	31	1byte
Fixed Value	31H	49	1byte
Separator	1FH	31	1byte
Other Information	30H or 31H	48 or 49	1byte
NUL	00H	0	1byte

L

and H data transmit graph: use dot for unit.

Other information data transmit:

“Hexadecimal=30H/Decimal=48”: Data is not printed.

“Hexadecimal=31H/Decimal=49”: Data is not printed.

Parameter range	pL=3, pH=0 cn=49

	fn=82 m=48
Default	None
Notes	This command do not print QR code graph. Users must consider QR code graph space.
Example	None
Name	Setting QR code graph information

Printing two dimensional code

Name	Printing two dimensional code
Code	ASCII ：GS k m v r nL nH d1…dk DEC ：29 107 97 v r nL nH d1…dk HEX ：1D 6B 61 v r nl nH d1…dk
Function	Printing two dimensional code. v: describes two dimensional code specification v=0: describes automatically select two dimensional code specification r: describes error correction rank nL nH: describes data length d1…dk: describes two dimensional code to be printed
Parameter range	0 ≤ v ≤ 17 1 ≤ r ≤ 4 k = nL + 256 * nH
Default	None
Notes	Printing QR code.
Example	1b 40 1D 6B 61 08 02 08 00 30 31 32 33 34 35 36 37
Name	Printing two dimensional code

Printing two dimensional code

Name	Printing two dimensional code
Code	ASCII ：ESC Z m n k dL dH d1…dn DEC ：27 90 m n k dL dH d1…dn HEX ：1B 5A m n k dL dH d1…dn
Function	①PDF417: bar code type 0 m specify the number of columns of two dimensional code. (1 ≤m≤30) When the bar code image is damaged, n specify a safety and stable recovery. (1 ≤n≤8) K defines horizontal and vertical ratios. (2≤K≤5) d is the data length and contains 2 bytes. dL: the first byte is the low-order byte. dH: the second byte is the high-order byte.

d1…dn is bar code data
affect PDF417 type by the bar code width command.

②QR-CODE：bar code type 2
m specify version flag. (1~40, 0: auto size)
N specify EC level. (L: 7%, M: 15%, Q: 25%, H:30%)
K specify component type. (1~8)
d is the data length and contains 2 bytes.
dL: the first byte is the low-order byte.
dH: the second byte is the high-order byte.
QR-CODE model form is as follows:

Version	Capacity (encoding) via EC level			
	L：7%	M：15%	Q：25%	H：30%
1	19	16	13	9
2	34	28	22	16
3	55	44	34	26
4	80	64	48	36
5	108	86	62	46
6	136	108	76	60
7	156	124	88	66
8	194	154	110	86
9	232	182	132	100
10	274	216	154	122
11	324	254	180	140
12	370	290	206	158
13	428	334	244	180
14	461	365	261	197
15	523	415	195	223
16	589	453	325	253
17	647	507	367	283
18	721	563	397	313
19	795	627	445	341

Range	None
Default	None
Notes	None
Example	None
Name	Printing two dimensional code

Printing double QR code

Name	Printing double QR code
Code	ASCII ：US Q m n p1H p1L l1H l1L ecc1 v1 d1…dn p2H p2L 12H l2L ecc2 v2 dk…dm DEC ：27 81 m n p1H p1L l1H l1L ecc1 v1 d1…dn

	p2H p2L 12H l2L ecc2 v2 dk…dm HEX ：1F 51 m n p1H p1L l1H l1L ecc1 v1 d1…dn p2H p2L 12H l2L ecc2 v2 dk…dm
Function	Printing double QR code
Range	QR code numbers：0<m>3 QR code size：n(1~8) P1H,p1L specify the location of QR1：(p1H*256+p1L) L1H,l1L specify the data length of QR1：（l1H*256+l1L） Ecc1 specify error correction level about QR1 ：（0:7%, 1:15%,2:25%,3:30%) V1 specify QR1 version of the symbol.(1~40, 0:auto size) D1…d2 as the data of QR1； P2H,p2L specify the location of QR2：(p2H*256+p2L) L2H,l2L specify the data length of QR2：（l2H*256+l2L） Ecc2 specify error correction level about QR2 ：（0:7%, 1:15%,2:25%,3:30%) V2 specify QR2 version of the symbol.(1~40, 0:auto size) Dk…dm as the data of QR2
Default	None
Notes	If module size is bigger than printing width, the QR data will be treated as normal data
Example	To Print string “0123456789” in QR Code at position 32 with ecc 1and Print string “987654321” in QR Code at position 192 with ecc 2, and module size 3, you should send command as follow。 1f 51 02 03 00 20 00 0a 01 06 30 31 32 33 34 35 36 37 38 39 00 C0 00 0a 02 00 39 38 37 36 35 34 33 32 31 30

⑦Status querying Commands

Transmission status

Name	Transmission status
Code	ASCII ：GS r n DEC ：29 114 n HEX ：1D 72 n
Function	Transmits the status specified by n as follows: **n** — **Function** 1, 49 — Transmits paper sensor status
Range	n = 1, 49
Default	None
Notes	When using a serial interface

When DTR/DSR control is selected, the printer transmits only 1 byte after confirming the host is ready to receive data (DSR signal is SPACE). If the host computer is not ready to receive data (DSR signal is MARK), the printer will wait until the host is ready.

When XON/XOFF control is selected, the printer transmits only 1 byte without confirming the status of the DSR signal.

This command is executed when data is generated in the print buffer.Therefore, there may be a time interval between receiving the command and sending status, depending on the status of the receiving buffer.

When Auto Status Back (ASB) is enabled using GS a, the status transmitted by GS r and the ASB status must be differentiated using.

The status types to be transmitted are shown as below:

Bit	Off/On	Hex	Decimal	Status for ASB
0,1	-	-	-	Undefined.
2,3	Off	00	0	Paperend sensor: paper adequate.
	On	(0C)	(12)	Paperend sensor: paper near end.
4	Off	00	0	unused. fixed to be Off.
5,6	-	-	-	Undefined.
7	Off	00	0	unused. fixed to be Off.

Paper sensor status (n = 1, 49):

Bits 2 and 3: When the paper end sensor detects the paper end, the printer goes offline and does not execute this command. Therefore, bits 2 and 3 do not transmit the status of paper end.

Example	None

Transit theprinter status to host

Name	Transit the printer status to host
Code	ASCII ： GS v DEC ： 27 118 HEX ： 1B 76
Function	transit a byte printer status to host. Only works in serial printer.

Send bytes are defined as follows：

byte	function	number
0		
1		
2	No paper	1
3	Printer failure	1
4	0	0
5		
6	The heating plate is overheated	1
7		

Default	None
Notes	None
Example	None

Transit printer ID

Name	Transit printer ID
Code	ASCII ： GS I n DEC ： 29 73 n HEX ： 1D 49 n

Function

Transit printer ID or the information that specified by printer

Send bytes are defined as follows：

n	ID type of printer	ID
1,49	ID of printer type	HEX：20/DEC：32
2,50	ID type	Check below

Bites	Off/on	HEX	DEC	Content
0	off	00	0	Double-byte character code is not supported
	on	01	1	Double-byte character code can be supported
1	on	02	2	Automatic paper cutter has been installed
2，3	--	--	--	unused
4	off	00	0	fixed
5	--	--	--	retain
6	--	--	--	unused
7	off	00	0	fixed

Information B can be specified

n	Printer type	Content
65	Fixed version	Depends on software version
66	manufacturer	“Cashino”

	67	Printing name	“LPM260”or“PTP-II”
	68	Printing ID	Seiral No.
	69	Chinese characters	Simplified Chinese mode：GBK
			Traditional Chinese mode：BIG-5
Range	n=1,2,49,50 [printer ID] 65 ≤ n ≤ 69[printer information B]		
Default	None		
Notes	None		
Example	None		

Select peripherals

Name	Select peripherals
Code	ASCII ： ESC=N DEC ： 27 61 n HEX ： 1B 3D n
Function	Select host device to transit the data n — function 1,3 — Enable printer 2 — Forbid printer
Range	0 ≤ n ≤ 255
Default	N=1
Notes	None
Example	None

Transit the status of peripherals to host

Name	Transit the status of peripherals to host
Code	ASCII ： ESC u DEC：27 117 HEX :1B 75
Function	Transit the status of peripherals to host, only works in serial printer. Senddefinition of bytes byte 0：drawer kick（0）/close electrical level（1） byte 4： constant to be0
Default	None
Notes	None
Example	None

Allow, forbid status uploading automatically

<table>
<tr><td>Name</td><td>Allow, forbid status uploading automatically</td></tr>
<tr><td>Code</td><td>ASCII ： GS a n
DEC ： 27 97 n
HEX ： 1D 61 n</td></tr>
<tr><td>Function</td><td>Only works in serial printer
n are defined as follows：
<table>
<tr><td rowspan="2">byte</td><td rowspan="2">Function</td><td colspan="2">Number</td></tr>
<tr><td>0</td><td>1</td></tr>
<tr><td>0</td><td>fixed to be 0</td><td></td><td></td></tr>
<tr><td>1</td><td></td><td></td><td></td></tr>
<tr><td>2</td><td>Forbid, allow status uploading automatically</td><td>Forbid</td><td>Allow</td></tr>
<tr><td>3-4</td><td></td><td></td><td></td></tr>
<tr><td>5</td><td>Forbid,allowERROR set BUSY RTS=BUSY</td><td>Forbid</td><td>Allow</td></tr>
<tr><td>6-7</td><td></td><td></td><td></td></tr>
</table></td></tr>
<tr><td>Default</td><td>None</td></tr>
<tr><td>Notes</td><td>When effective, printer found status changed, the status will be automatically sent to the host</td></tr>
<tr><td>Example</td><td>None</td></tr>
</table>

Real-time transmission status

Name	Real-time transmission status
Code	ASCII ： DLE EOT n DEC ： 16 4 n HEX ： 10 04 n
Function	According to below parameters, transit the real-time status of printer,n stands for printer status: N=1:transmit printer status N=2:transmit off-line status N=3:transmit error status N=4:transmit paper sensor status
Range	1 ≤ n ≤ 4
Default	None
Support	All

Notes

•Printer return to the relative status immediately after receiving the command

• this command try not to put in command list between 2 or more bite . Though printer being forbid by ESC=,this command still effective.

Printer transmit current situation ,each situation show by 1 bite data.

It is not sure host computer will receive printer transmit situation.

Printer executed immediately after received the command.

The command only effective for serial printer.Printer start to work immediately after receiving this command at any situation.

n=1：printer status

Bit	0/1	Hexadecimal	decimalism	Function
0	0	00	0	Fixed to be 0
1	1	02	2	Fixed to be 1
2	0	00	0	Two drawers kick(no drawer, fixed to be 0）
	1	04	4	Turn off two cashbox
3	0	00	0	On-line
	1	08	8	Off-line
4	1	10	16	Fixed to be 1
5, 6		--	--	undefined
7	0	00	00	The paper has been torn away
	1	80	96	The paper hasn't been torn away

n=2：transit off-line status

bite	0/1	Hexadecimal	decimalism	Function
0	0	00	0	Fixed to be 0
1	1	02	2	Fixed to be 1
2	0	00	0	Turn off upper cover

	1	04	4	Open upper cover
3	0	00	0	Not press feed key
	1	08	8	press feed key
4	1	10	16	Fixed to be 1
5	0	00	0	Paper adequate
	1	20	32	Paper shortage
6	0	00	00	No error
	1	40	64	Error
7	0	00	0	Fixed to be 0

n=3：transmit error status

bite	0/1	Hexadecimal	decimalism	Function
0	0	00	0	Fixed to be 0
1	1	02	2	Fixed to be 1
2		--	--	Undefined
3	0	00	0	No cutter error
	1	08	8	Cutter error
4	1	10	16	Fixed to be 1
5	0	00	0	No unrecoverable error
	1	20	32	Unrecoverableerroe
6	0	00	00	Printer head tempand voltage are normal
	1	40	64	Printer head temp.and voltage are exceed
7	0	00	0	Fexed to be 0

Unrecoverable error: abnormal input voltage

Automatic recovery error: refers to the printing head overheating error. When the printing head overheating error occurs, wait for a period of time. When the printing head temperature drops, the error will be automatically recovered.

n=4：paper sensor status

bite	0 / 1	Hexadecimal	decimalism	Function
0	0	00	0	Fixed to be 0
1	1	02	2	Fixed to be 1
2，3	0	00	0	Paper
	1	0C	12	Paper near-end
4	1	10	16	Fixed to be 1
5，6	0	00	0	Paper
	1	60	96	Paper end
7	0	00	0	Fixed to be 0

Example	10 04 01 10 04 02 10 04 03 10 04 04

Real-time request

Name	Real-time request
Code	ASCII ：DLE ENQ n DEC ：16 5 n HEX ：10 05 n
Function	The printer responds to the request n of the host by specifying the following request

n	Request
1	Restart printing from the error recovery and from the line where the error occurred This command is ignored unless a recoverable error occurs
2	Restore the printer from the error status and empty

			the command receiving buffer and printing buffer, which is ignored unless a failure is too lazy to occur
Range	N=1,2		
Default	None		
Notes	This command valids only when the cutter goes wrong Consider the following: 1. If the printer data contains the same data as the command, the data will be executed as the command. Users need to consider this situation. Example: the graphic data may contain strings that matchs it 2. Do not embed this command into another command Example: the graphical data may contain this command		
Example	None		

Real-time pulse

Name	Real-time pulse
Code	ASCII ： DLE DC4 fn m t DEC ： 16 20 fn m t HEX ： 10 14 fn m t
Function	T stands for the real-time output pulse, and m is the connection pin m — Connection pin 0 — drawer socket pin 2 1 — drawer socket pin 2 T specifies that the starting/closing time of the pulse is (t*100ms)
Range	Fn=1, m=0,1,10≤ t≤ 8
Default	None
Notes	Consider the following: 1. If the printer data contains the same data as the command, the data will be executed as the command. Users need to consider this situation. Example: the graphic data may contain strings that matchs it 2. Do not embed this command into another command Example: the graphical data may contain this command
Example	None

⑧Commands in page print mode

Forms feed

Name	Forms feed

Code	ASCII ： FF Decimal ： 12 Hex ： 0C
Function	The FF command prints the data already contained in the print buffer, then sets the next-data receive position at the leftmost column on the next page.
Range	None
Default value	None
Notes	Valid only when this command is input in page print mode. Remove data from print buffers after printing This command sets the print location as the starting point for the line
Example	None

Data print in page print mode

Name	Data print in page print mode
Code	ASCII ： ESC FF Decimal ： 27 12 Hex ： 1B 0C
Function	Performs the batch printing of data developed in the entire print area in page print mode.
Range	None
Default value	None
Notes	Valid only when this command is input in page print mode.
Example	None

Page print mode select

Name	Page print mode select
Code	ASCII ： ESC L Decimal ： 27 76 Hex ： 1B 4C
Function	Switches from standard mode to page mode.
Range	None
Default value	None
Notes	Valid only when this command is input in page print mode. In the line print mode，this function is valid only when this command is input in the beginning of the line After turning on power，or resetting printer printing by ESC@ ,page print mode is returned to line print mode.
Example	None

Line print mode select.

Name	Line print mode select.
Code	ASCII ： ESC S Decimal ： 27 83 Hex ： 1B 53
Function	The ESC S command selects line print mode.
Range	None
Default value	None
Notes	Valid only when this command is input in page print mode. Data developed in page print mode is erased. This command sets the print location as the starting point for the line. The print locale set by ESC W is initialized
Example	None

Character development angle select in page print mode.

Name	Character development angle select in page print mode.
Code	ASCII ： ESC T n Decimal ： 27 84 n Hex ： 1B 54 n
Function	This command sets the print direction of characters in the page print mode and the start position of data development. The relationship of n, print direction and start position of data development is as follows.：

a	Development direction	Development start position
0,48	Left → right	Upper left [(a) in drawing at right]
1,49	Bottom → top	Lower left [(b) in drawing at right]
2,50	Right → left	Lower right ([(c) in drawing at right]
3,51	Top→bottom	Upper right [(d) in drawing at right]

	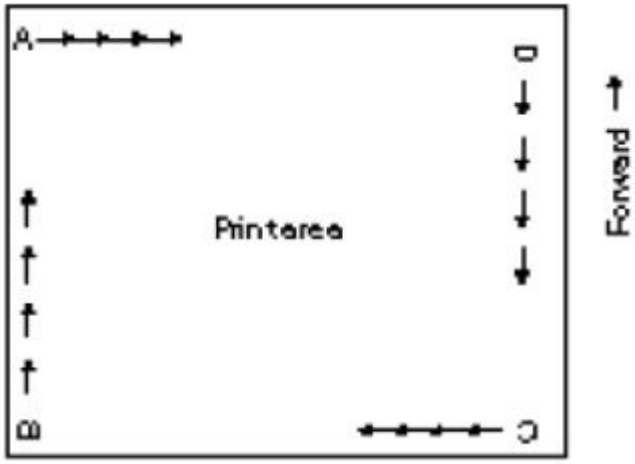
Range	0 ≤ n ≤ 3, 48≤ n ≤ 51
Default value	n=0
Notes	When line mode is specified, only the internal set values are changed, and printing in line mode is not influenced by this command. If page area is changed by ESC W, the start point of character development is changed according to the area size
Example	None

Page print mode print area setting

Name	Page print mode print area setting.
Code	ASCII ： ESC W xL XH yL yH dxL dxH dyL dyH Decimal ： 27 87 xL XH yL yH dxL dxH dyL dyH Hex ： 1B 57 xL XH yL yH dxL dxH dyL dyH
Function	X0,y0,dx,dy define respectively Horizontal start point, Vertical start point,Horizontal length,Vertical length Each parameter sets the following functions： X0=[(xL+xH*256)*0.125mm] y0=[(yL+yH*256)*0.125mm] dx=[(dxL+dxH*256)*0.125mm] dy=[(dyL+dyH*256)*0.125mm]
Range	0 ≤ xL,xH,yL,yH,dxL,dxH,dyL,dyH≤255 (Except dxL=dxH=0 or dyL=dyH=0)
Default value	None
Notes	When line mode is specified, only the internal set values are changed, and printing in line mode is not influenced by this command； If the horizontal start point or the vertical start point is not in a printable area， printer stops the command processing and follows the following data to normal processing； If the print area width and height are set to 0， printer stops the

	command processing and follows the following data to normal processing； This command sets the area of the data buffer, which is the area specified by the ESC T in the Print area range ; If the (horizontal start point+width of print area)exceed the print area,then the print area width is automatically set to (horizontal printable area-horizontal start point); If the (vertical start point+height of print area)exceed the print area,then the print area width is automatically set to (vertical printable area-vertical start point); Use 0.125mm space to set the horizontal start position and print area width, and use 0.125mm space to set the vertical start position and print area height； If the horizontal start point is X, the vertical start point is Y, the horizontal length is dX and the vertical length is dY, then the printable area is as follows.： 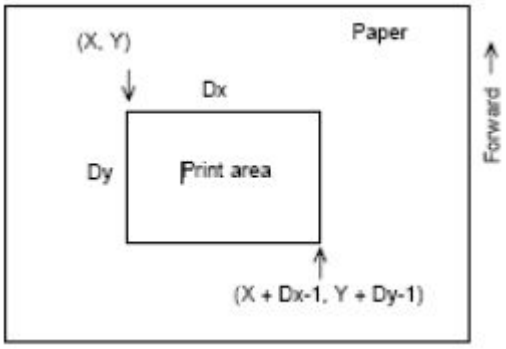
Example	None

Vertical absolute position setting in page print mode

Name	Vertical absolute position setting in page print mode
Code	ASCII ： GS $ nL nH Decimal ： 29 36 nL nH Hex ： 1D 24 nL nH
Function	The GS $ command sets vertical absolute position in page print mode.。 The absolute position is at [(nL+nH*256)*0.125mm]
Range	0 ≤ nL≤255, 0 ≤ nH≤255
Default value	None
Notes	Valid only when this command is input in page print mode. If [(nL+nH*256)*（vertical or horizontal movement unit）] this command is ignored Does not move at the horizontal starting area of the buffer The command operates as follows, depending on the starting area of the print area set by the ESC T

	If start area is set to upper left or lower right,then this command sets absolute area in vertical direction If start area is set to upper right or lower left,then this command sets absolute area in horizontal direction
Example	None

Vertical relative position setting in page print mode

Name	Vertical relative position setting in page print mode
Code	ASCII ： GS \ nL nH Decimal ： 29 92 nL nH Hex ： 1D 5C nL nH
Function	Page mode setting starts at the current position and prints the start position relatively vertically This command sets the distance from the current position to [(nl+nh*256) *0.125mm]
Range	0 ≤ nL≤255, 0 ≤ nH≤255
Default value	None
Notes	When the specified n is a downward motion： nL+nH*256=N When you specify N as the upward motion (negative direction), use the 65536 complement When the specified n is up motion： nL+nH*256=65536-N Any settings that exceed the specified print area are ignored Use vertical motion units(y) when you set the start position to the upper-left or lower-right of the print area Use horizontal Motion unit (x) when you set the start position to the upper right or lower left of the print area
Example	None

⑨Other commands

Printer reset

Name	Printer reset
Code	ASCII ： ESC @ Decimal ： 27 64 Hex ： 1B 40
Function	The ESC @ command initializes the printer as following： This command prints the data contained in the print buffer, and initializes various setup items. Restore default values for each parameter
Range	None

Default value	None
Notes	None
Example	None

Print self-test page

Name	Print self-test page
Code	ASCII ： DC2 T Decimal ： 18 84 Hex ： 12 54
Function	Printing a self-test page which including firmware version,interface,codepage and other some information
Range	None
Default value	None
Notes	None
Example	1B 40 12 54